TurnKey
DUCT SYSTEMS

Spiral Pipe and Fittings Catalog

Available In:

- Single Wall
- Double Wall
- Acoustically Lined
- PVC Coated
- Paint Grip
- Aluminum
- Stainless Steel

12450 Cleveland Road Suite 204
Garner, NC 27529
Phone: (919)662-9232 | Fax: (919)662-9234
www.turnkeyduct.com

12450 Cleveland Road Suite 204
Garner, NC 27529
Phone: (919)662-9232 | Fax: (919)662-9234
www.turnkeyduct.com

SINGLE WALL ROUND AND OVAL SUBMITTAL

Project Name: _____ Section Number: _____

Engineer: _____ Systems: _____

Contractor: _____ Additional Comments: _____

Turn Key Duct Representative: _____

Pressure Class:

- ☐ 2005 Up to 10" wg
- ☐ 1995 2" wg pos
- ☐ 1995 4" wg pos
- ☐ 1995 10" wg pos
- ☐ 2005 neg WG: _____
- ☐ 1995 neg WG: _____
- ☐ Underground
- ☐ Special Gauge per Spec

Material Type:

- ☐ G90
- ☐ Paint Grip
- ☐ Aluminum
- ☐ 304 SS
- ☐ 316 SS
- ☐ 4 x 1 Coated
- ☐ 4 x 4 Coated

Connections

- ☐ Couplings
- ☐ Gasket 36" max
- ☐ Sheet Metal Flange 10" min
- ☐ Spiralmate/Ovalmate
- ☐ Vanstone Flg Angle Ring
- ☐ Welded Flg Angle Ring
- ☐ Weld Flange
- ☐ Raw for butt weld

Installation:

- ☐ Installed
- ☐ Loose
- ☐ Slot Only

Tap Type

- ☐ Straight taps
- ☐ Conical taps
- ☐ Increased area taps
- ☐ Combination taps
- ☐ Lateral
- ☐ Conical lateral

Pipe Construction:

- ☐ Spiral
- ☐ Long Seam Welded
- ☐ Pipelock

Construction:

- ☐ Gore Lock / Spot & Seal
- ☐ Continuously welded

Single/Dual Wall

- ☐ Single Wall
- ☐ 1" Double Wall
- ☐ 2" Double Wall
- ☐ Mylar
- ☐ Mat faced
- ☐ Special Density _____

Grille Boxes:

- ☐ 4" std GBST
- ☐ 4" std GBST w/1" liner
- ☐ 4" std GBST Double Wall
- ☐ 45 degree entry GBST
- ☐ 45 degree entry GBST w/1" liner
- ☐ 45 entry GBST Double wall

Tee/Saddle:

- ☐ Full body fittings
- ☐ Loose saddle taps
- ☐ Manifold saddle taps

Inner Pipe:

- ☐ Perf
- ☐ Solid

Inner Fittings:

- ☐ Perf
- ☐ Solid

Misc:

- ☐ Access doors at FD locations / factory installed
- ☐ Double single wall adaptors as required / factroy installed
- ☐ Reducers at VAV boxes-shown or not
- ☐ Single blade low pressure volume dampers - 20" max installed

Date Submitted: _____

Date Approved: _____ Comments: _____

About Us

Turn Key Duct Systems is a nationwide provider of spiral round, flat oval, and rectangular duct, as well as welded duct serving the commercial and industrial markets. While opening in July of 2010, the sales staff brings together over 50 years of knowledge and experience in the duct manufacturing business. The manufacturing facilities have been fabricating duct since 1995. We offer a variety of material types, connection options, and manufacturing techniques for both the rectangular and spiral duct fittings. As our name says, it is our goal to provide you a “Turn Key Duct System”. This begins with a complete estimate. Then we offer you a cad drawing to show the duct we will be manufacturing with piece numbers and color coding. We fabricate quality products and inspect them for fit as well as meeting industry standards. Materials are then scheduled with you and delivered to your job site ready for easy installation.

TurnKey
DUCT SYSTEMS

12450 Cleveland Road Suite 204
Garner, NC 27529
Phone: (919)662-9232 | Fax: (919)662-9234
www.turnkeyduct.com

SPIDA

ROUND HVAC DUCT and FITTINGS

Standards and Dimensional Data
for Round Air Duct and Fittings
as Manufactured by Members of SPIDA

Turn Key Duct Systems is a proud member of SPIDA

ROUND SINGLE WALL DUCT AND FITTINGS

LEGEND

E ------ ELBOW
T ------- TEE
L -------- LATERAL
C -------- CROSS
R -------- REDUCER
SET ---- OFFSET
SAD ---- SADDLE TAP
B----------BELLMOUTH
MC ------–MALE COUPLING
N ----------END CAP
CON -------- CONICAL
CSADD ---- CURVED SADDLE
FSADD ----- FLAT SADDLE
Y ---------- WYE FITTING
AR ---------- ANGLE IRON RING
SQ2RND ---SQUARE TO ROUND
FM----------FEMALE COUPLING

MATERIAL (SPECIFY)

GALVANIZED STEEL
PAINT GRIP
STAINLESS STEEL
ALUMINUM
BLACK IRON
PVC COATED

DIMENSIONING

S – SLIP (2”)
H – HEIGHT
Z – DIMENSION OF OFFSET
A – DIAMETER OF MAIN INLET
V – BODY LENGTH
L – REDUCER LENGTH
R - RADIUS
B – DIAMETER OF MAIN OUTLET
C,D,E,F – DIAMETER OF TAKE OFF TAPS

VANE CHART

For mitered elbows and tees use the following chart if vanes are required.

“A” Dimension	Number of Vanes
3 – 9”	2
10 – 14”	3
15 – 19”	4
20 – 60”	5
Over 60”	12” spacing

ORDERING

Specify type of fitting and list the following dimensions:

ELBOWS - A,B
LATERALS - A,B,(C,D,E,F)
REDUCERS - A,B,C,D,(L,Z)
TEES - A,B,(C,D,E,F)
CROSSES - A,B,C,D,(E,F,G,H)
OFFSETS - A,B,L,Z,

The drawings shown are illustrative of the types of fittings manufactured.

All fittings, unless noted, are male sized on each end for slip-joint assembly with Spiral Duct.

Vanstone or other proprietary connections are available by special order.

Galvanized or Stainless Steel Minimum Gauges

Positive Pressure			to +10" wg
Spiral Duct		Long Seam	
3" - 14"	26	26	3" - 18"
15" - 24"	26	24	19" - 24"
25" - 42"	24	22	25" - 42"
43" - 66"	22	20	43" - 60"
67" - 96"	20	18	61" - 96"

Negative Pressure			to -2"wg
Spiral Duct		Long Seam	
4" - 14"	26	26	4" - 11"
15"-17"	26	26	12"- 13"
18" - 20"	24	24	14" - 17"
22" - 28"	22	22	18" - 22"
30" - 34"	20	20	24" - 28"
36" - 46"	18	18	30" - 34"
48" - 58"	16	16	36" - 46"

Aluminum Minimum Gauges

Positive Pressure			to +2" wg
Spiral Duct		Long Seam	
3" - 8"	.025	.032	3" - 8"
9" - 14"	.025	.032	9" - 14"
15" - 26"	.032	.040	15" - 26"
27" - 36"	.040	.050	27" - 36"
37" - 50"	.050	.063	37" - 50"
51" - 60"	.063	.071	51" - 60"

Negative Pressure			to -2"wg
Spiral Duct		Long Seam	
3" - 8"	.025	.040	3" - 8"
9" - 14"	.032	.040	9" - 14"
15" - 26"	.040	.050	15" - 26"
27" - 36"	.050	.063	27" - 36"
37" - 50"	.063	.070	37" - 50"
51" - 60"	N.A.	.090	51" - 60"

ROUND FITTINGS

E-90-1
STAMPED 90°
3" - 12" Diameter only
R = 1.5 x A
R = 1.0 x A Available upon request.

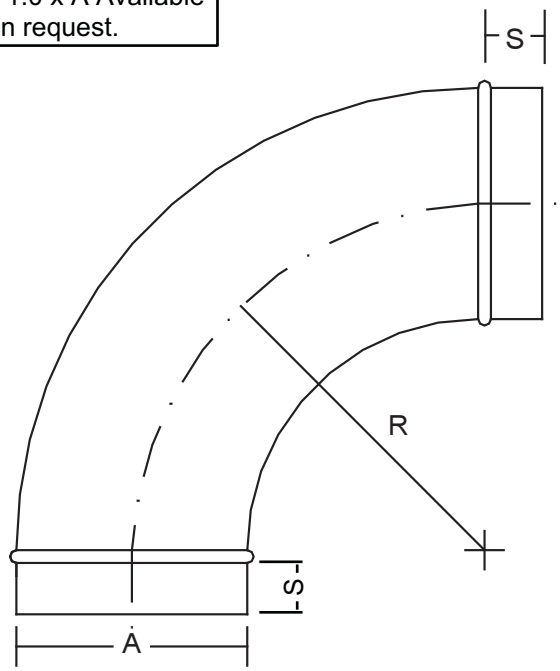

S = 2"

E-45-1
STAMPED 45°
3" - 12" Diameter only
R = 1 x A
R = 1.0 x A Available upon request.

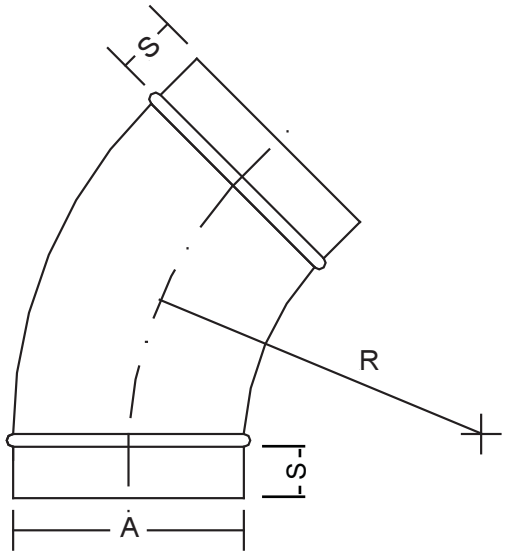

S = 2"

E-90-5 E-90-4 E-45-3
GORED ELBOW

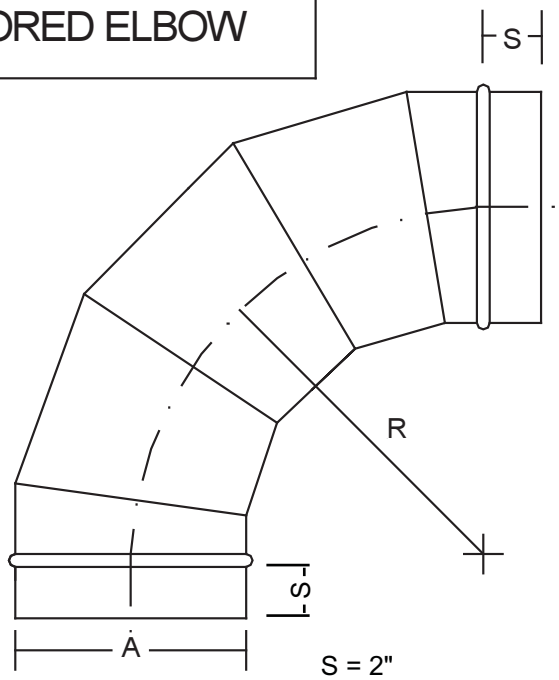

S = 2"

E = Elbow 90 = Degree 5 = Number of Gores
R = 1.5 x A on 5 Gore 90 degree elbows
R = 1 x A on 4 Gore 90 degree elbows
R = 1.5 x A on 3 Gore 45 degree elbows

EV-90-2
2 pc 90°

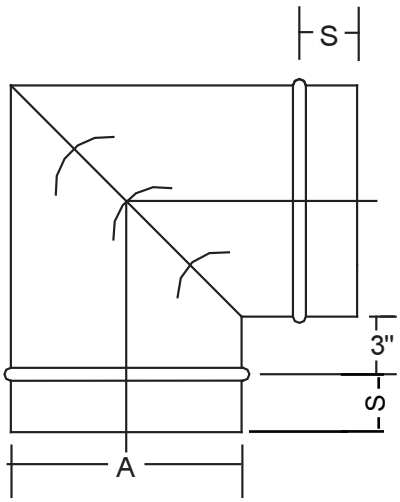

Specify with or without turning vanes

S = 2"

ROUND FITTINGS

T-1
TEE

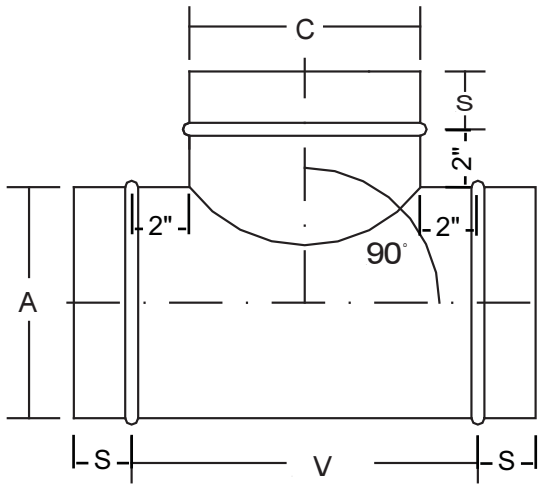

S = 2"
V = C + 4"

T-1R
REDUCING TEE

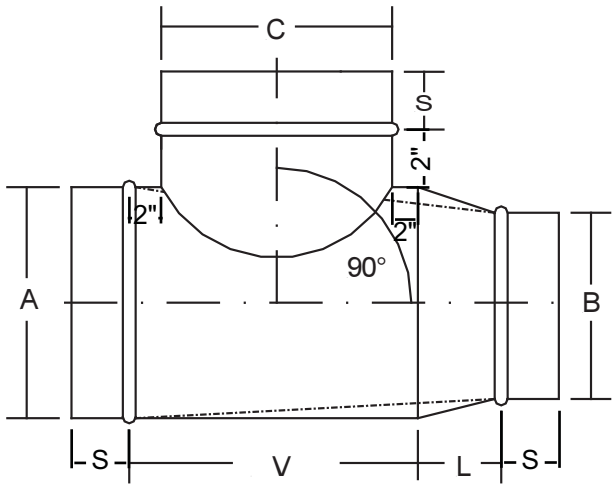

Indicates alternative method

S = 2"
V = C + 4"
L = A-B (4" MIN, 12" MAX.)

CON-T-1
CONICAL TEE

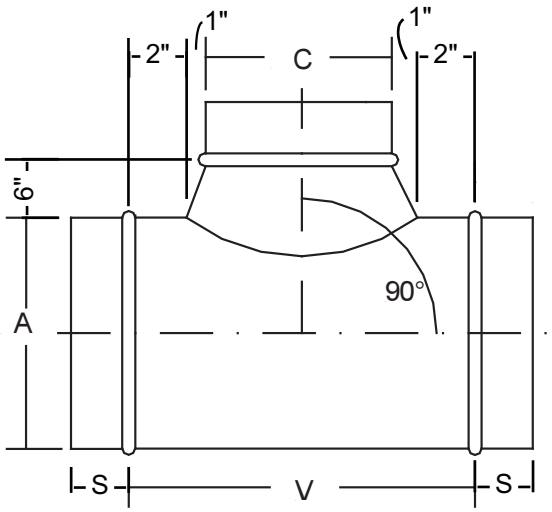

S = 2"
V = (C + 2") + 4

CON-T-1R
CONICAL REDUCING TEE

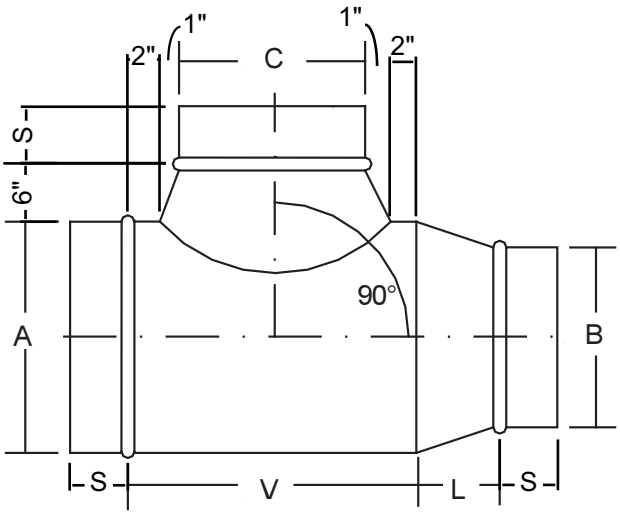

S = 2"
V = (C + 2") + 4"
L = A-B (4" MIN, 12" MAX.)

ROUND FITTINGS

L
LATERAL

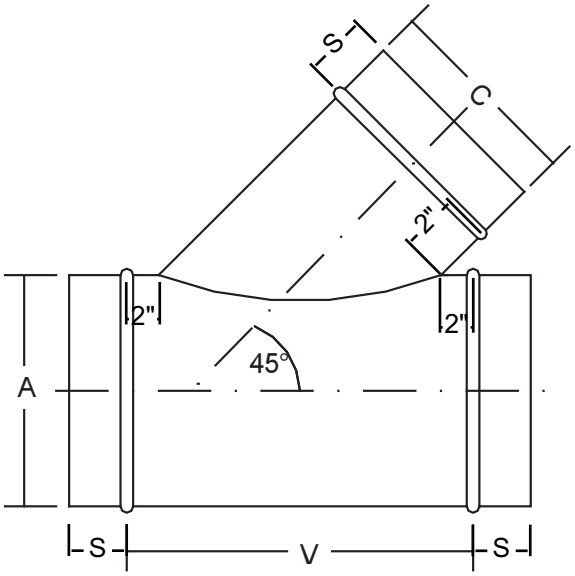

S = 2"
V = (Cx1.414) + 4"

LR
REDUCING LATERAL

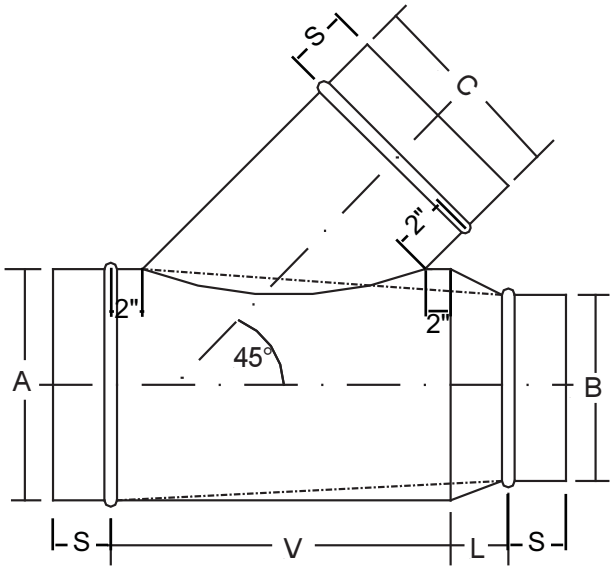

Indicates alternative method

S = 2"
V = (Cx1.414) + 4"
L = A-B (MIN. 4" MAX 12")

CON-L
CONICAL LATERAL

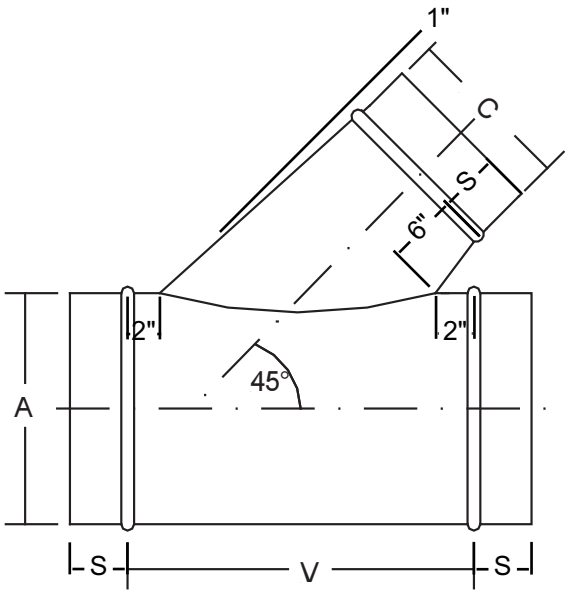

S = 2"
V = ((C+2)x1.414) + 4"

CON-LR
CONICAL REDUCING LATERAL

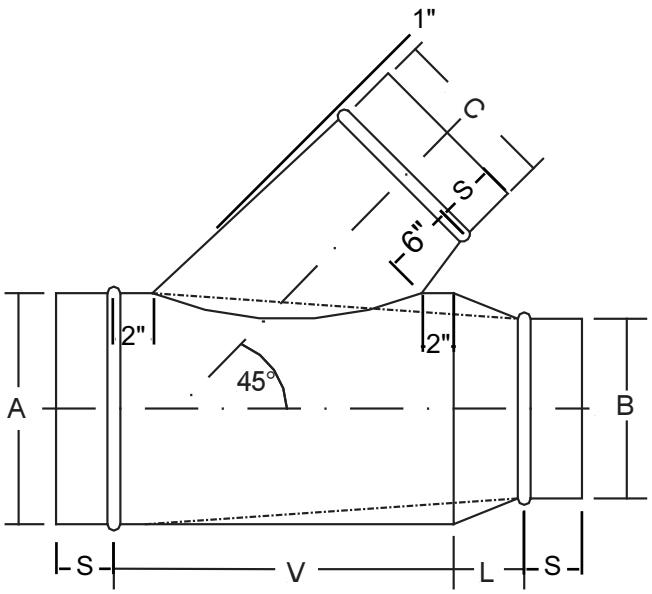

Indicates alternative method

S = 2"
V = ((C+2)x1.414) + 4"
L = A-B (MIN. 4" MAX. 12")

ROUND FITTINGS

CMBT
COMBINATION TEE

C = 3 - 8	Y= 4"
C = 9 - 14	Y=7"
C = 15 - 26	Y=10"
C = 27 & up	Y= 13"

S = 2"
V = (C + Y) + 4"

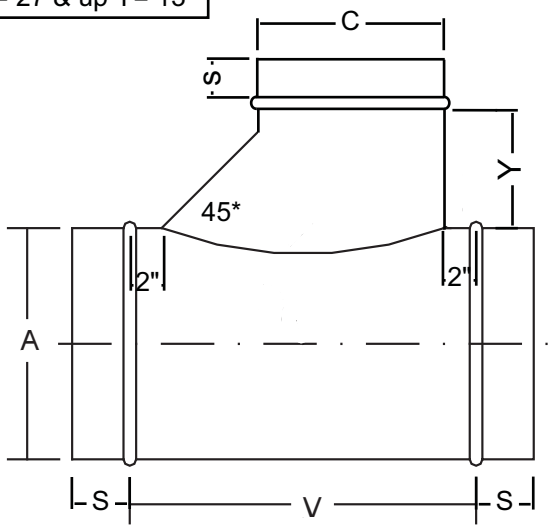

CMBTR
COMBINATION TEE RED.

C = 3 - 8	Y= 4"
C = 9 - 14	Y=7"
C = 15 - 26	Y=10"
C = 27 & up	Y= 13"

S = 2"
V = (C + Y) + 4"
L = A-B (MIN. 4" MAX 12")

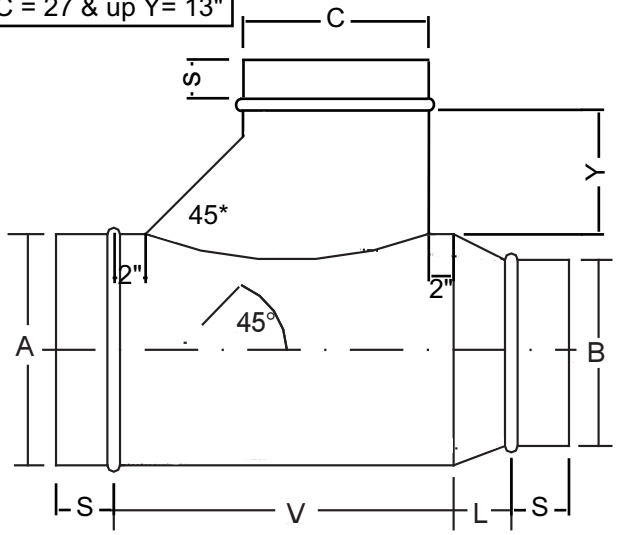

CMBC
COMBINATION CROSS

C = 3 - 8	Y= 4"
C = 9 - 14	Y=7"
C = 15 - 26	Y=10"
C = 27 & up	Y= 13"

S = 2"
V = (larger of C or D + Y) + 4"

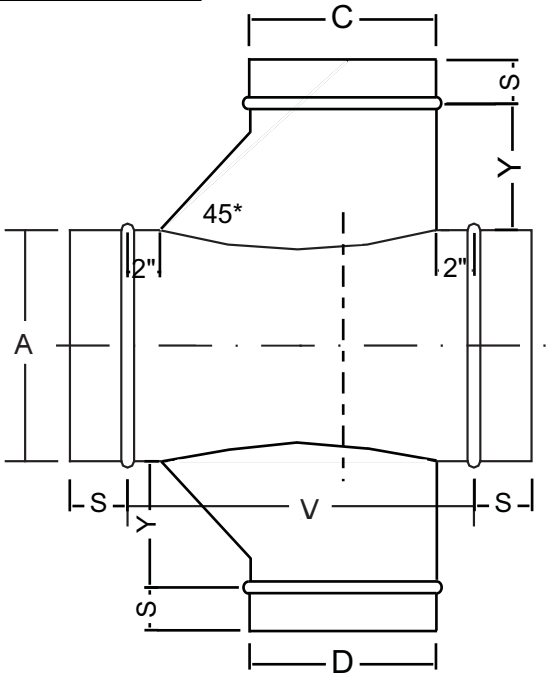

CMBCR
COMBINATION CROSS RED.

C = 3 - 8	Y= 4"
C = 9 - 14	Y=7"
C = 15 - 26	Y=10"
C = 27 & up	Y= 13"

S = 2"
V = (larger of C or D + Y) + 4"
L = A-B (MIN. 4" MAX 12")

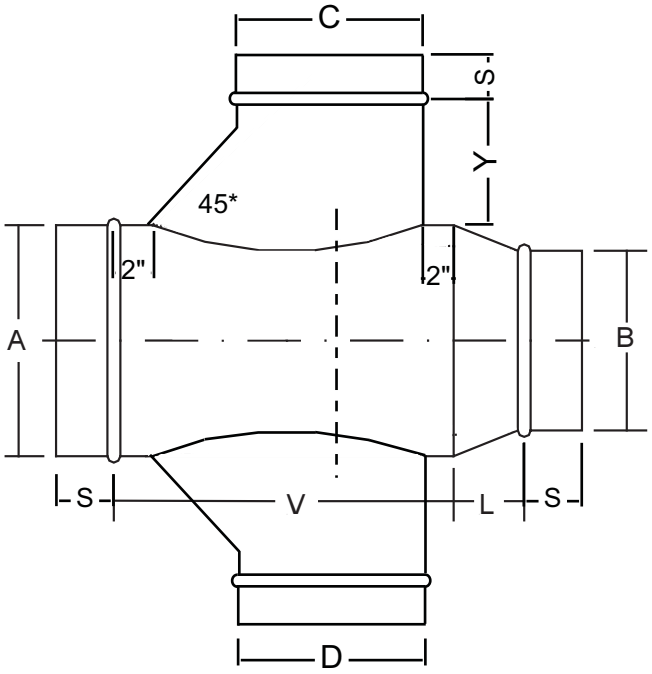

ROUND FITTINGS

C
CROSS

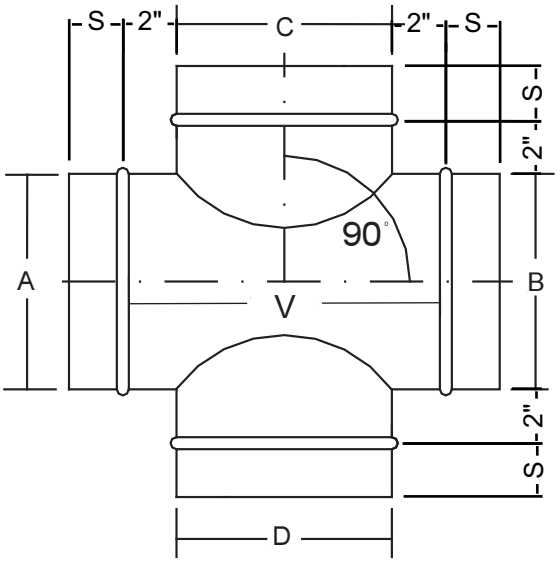

V = (LARGEST TAP) + 4
S = 2"

CON-C
CONICAL CROSS

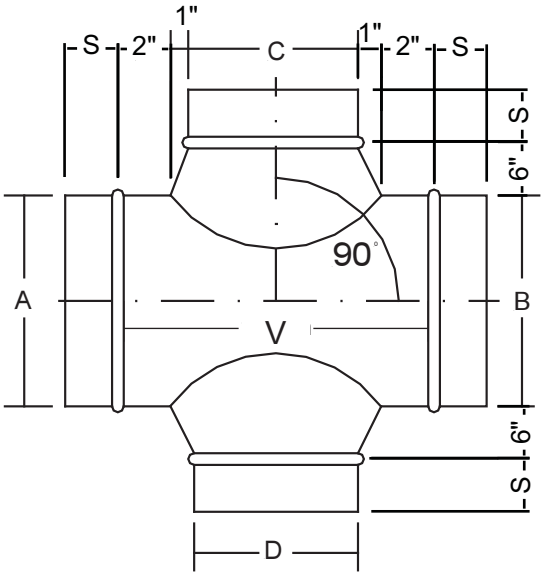

V = (LARGEST TAP + 2) + 4
S = 2"

Y
EQUAL Y

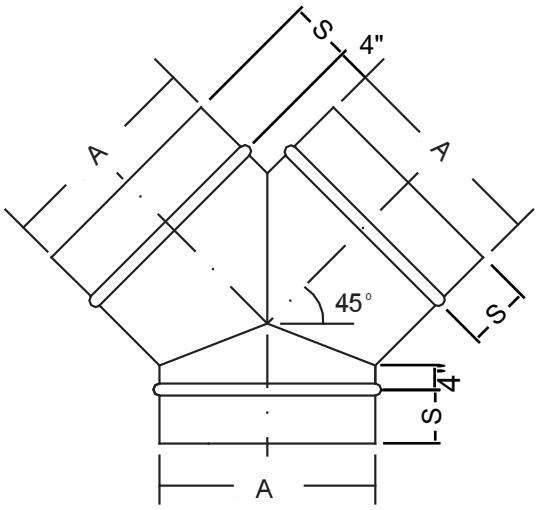

S = 2"

RED-Y
REDUCING Y

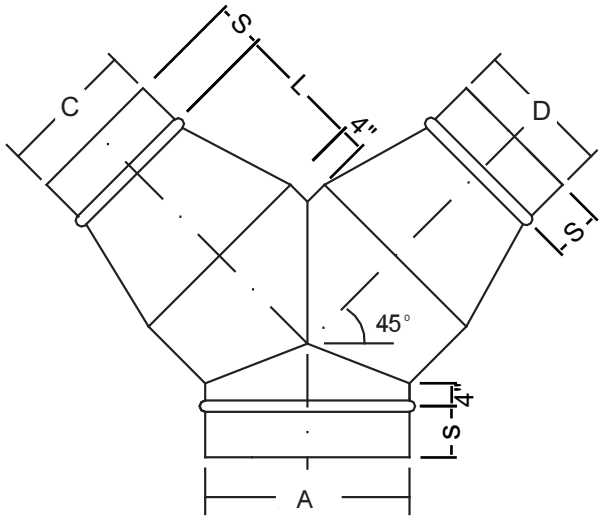

S = 2"
L = A - (B or C) (4" MIN. 12" MAX.)

ROUND FITTINGS

LC
LATERAL CROSS

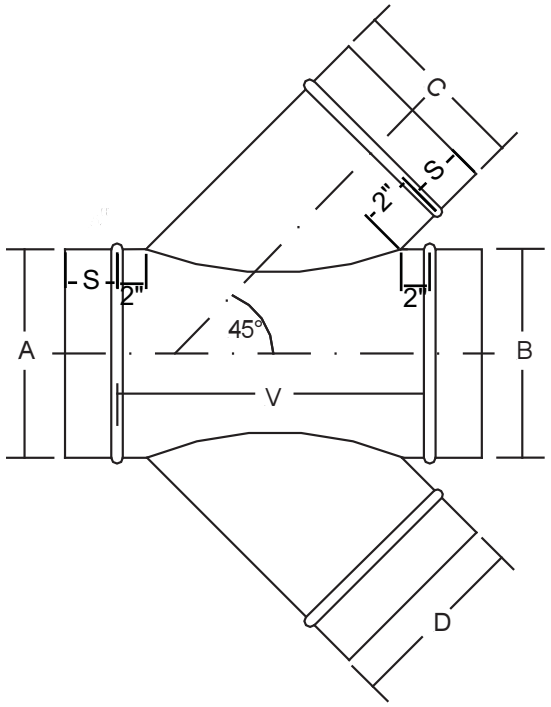

S = 2"
V = ((LARGEST OF TAPS X 1.414) + 4)

LCR
REDUCING LATERAL CROSS

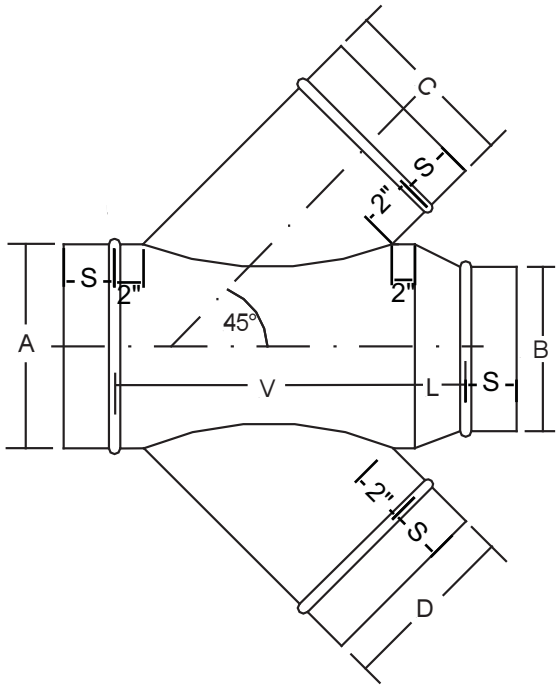

S = 2"
V = ((LARGEST OF TAPS X 1.414) + 4)
L = A-B (MIN. 4" MAX. 4")

CON-LC
CONICAL LATERAL CROSS

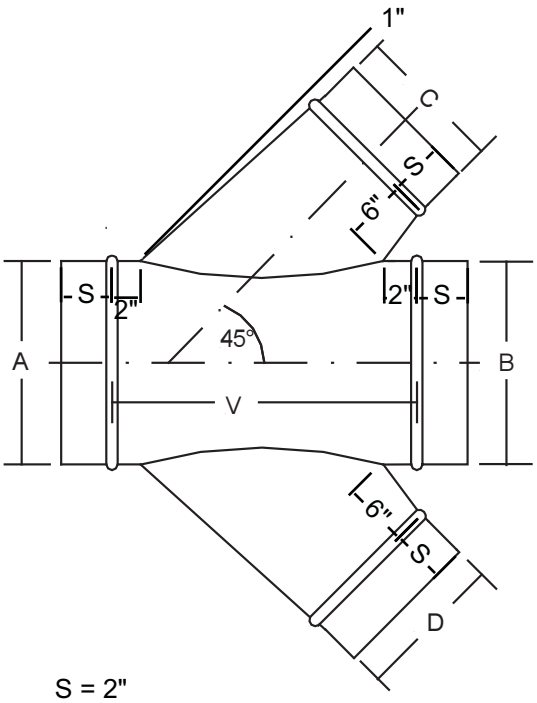

S = 2"
V = ((LARGER OF TWO TAPS +2) x 1.414) + 4

CON-LCR
CONICAL REDUCING LATERAL CROSS

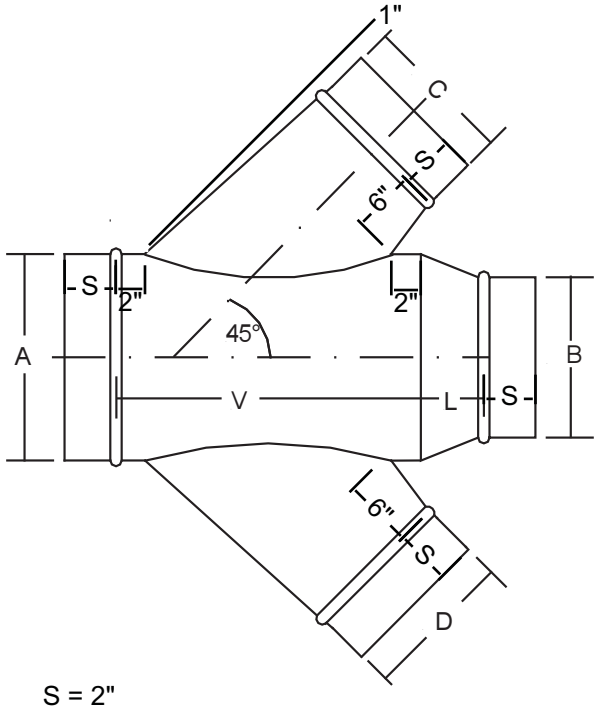

S = 2"
V = ((LARGER OF TWO TAPS +2) x 1.414) + 4
L = A-B (MIN. 4" MAX. 12")

ROUND FITTINGS

R
CONCENTRIC REDUCER

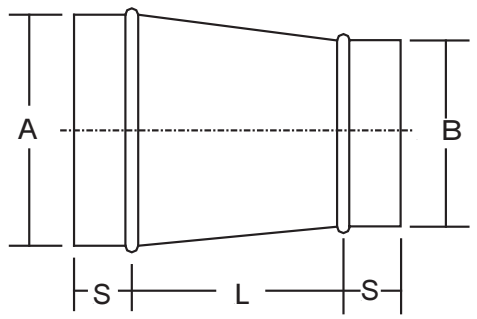

S = 2"
L = A-B (MIN. 4" MAX. 12")

ER
ECCENTRIC REDUCER

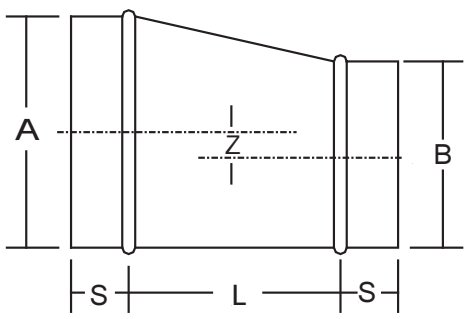

S = 2"
L = (A-B) x 1 3/4" (MIN. 4")

SET
OFFSET

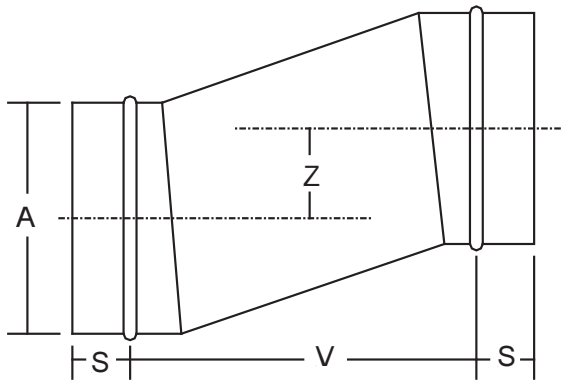

S = 2"
V = 2 1/2 x Z

RTR
RECTANGLE TO ROUND

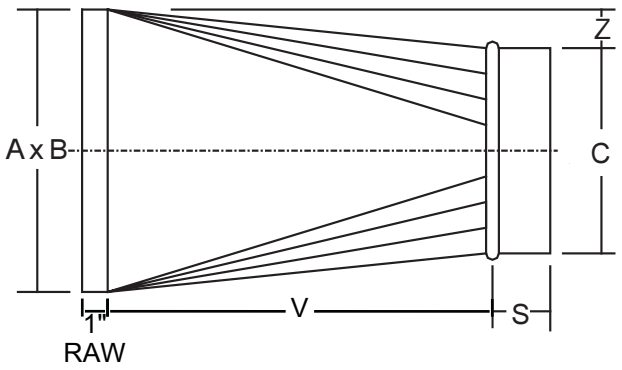

S = 2"
V = A-C (MIN. 6")

ROUND FITTINGS

GBT
GRILLE BOX TAP

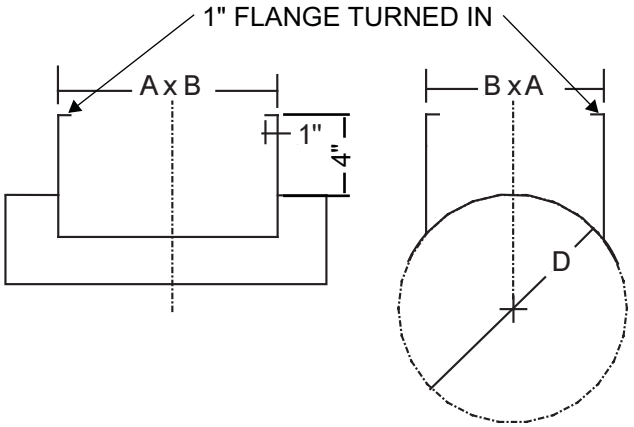

TEGBT
TAPERED ENTRY GRILLE BOX TAP

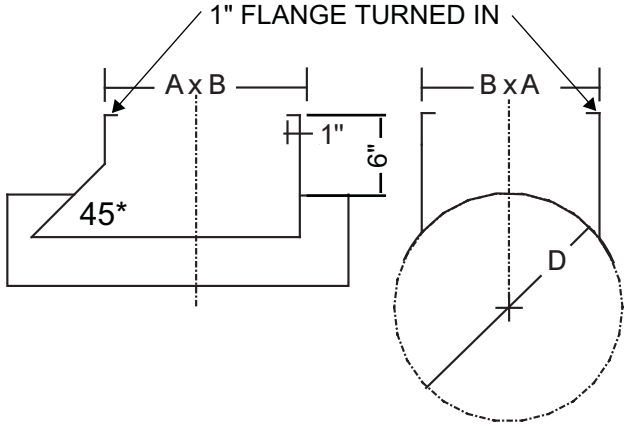

LST
LATERAL SADDLE TAP

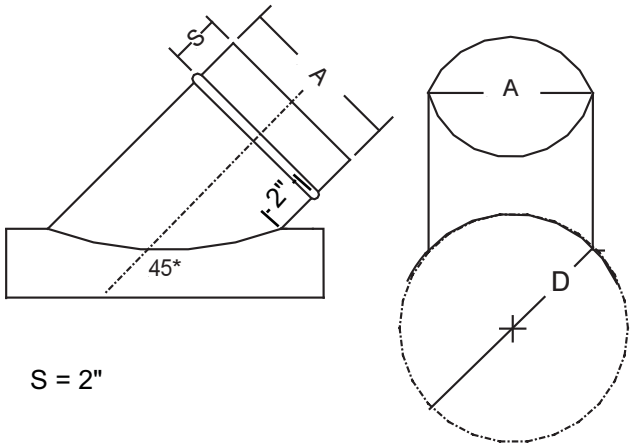

S = 2"

PET
PRESSED RADIUS ENTRY TAP

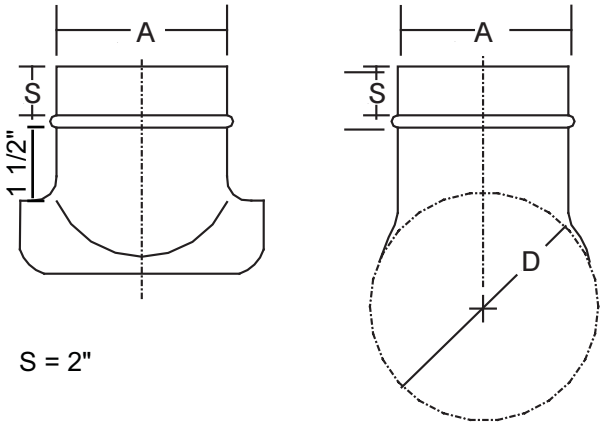

S = 2"

ST
SADDDLE TAP

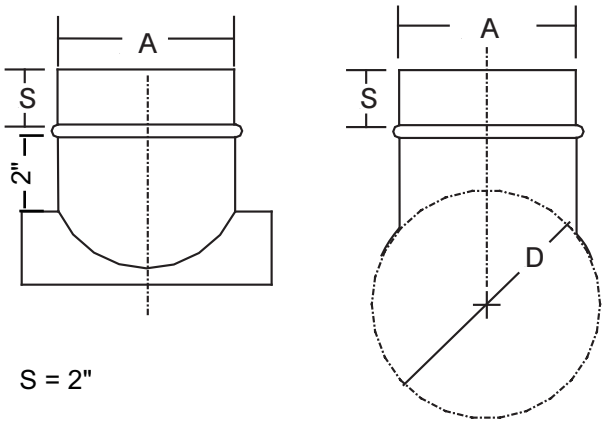

S = 2"

CST
CONICAL SADDLE TAP

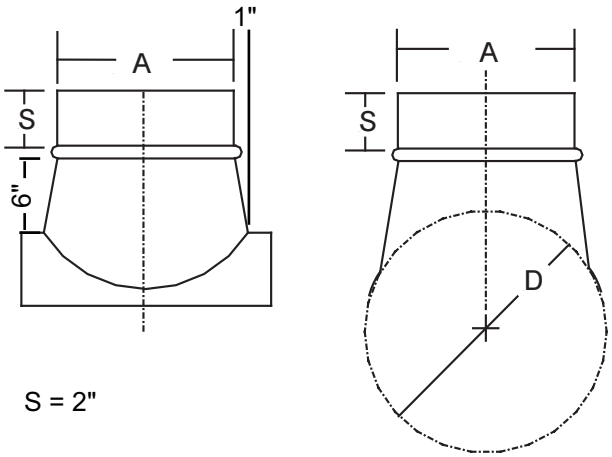

S = 2"

ROUND FITTINGS

FT
FLAT TAP

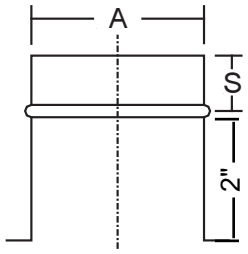

S = 2"

N-1 for duct
N-2 for fittings
END CAP

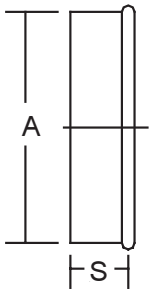

S = 2"

CMBFT
COMBINATION FLAT TAP

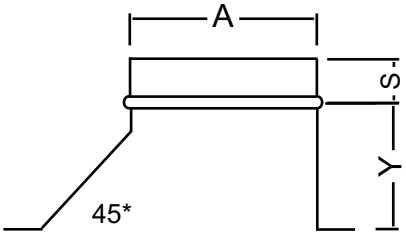

A = 3 - 8	Y= 4"
A = 9 - 14	Y=7"
A = 15 - 26	Y=10"
A = 27 & up	Y= 13"

S = 2"

CFT
CONICAL FLAT TAP

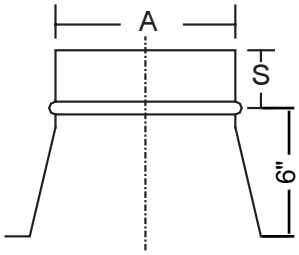

S = 2"

S-1 for duct to duct (male)
S-2 for fitting to fittting (female)
COUPLING

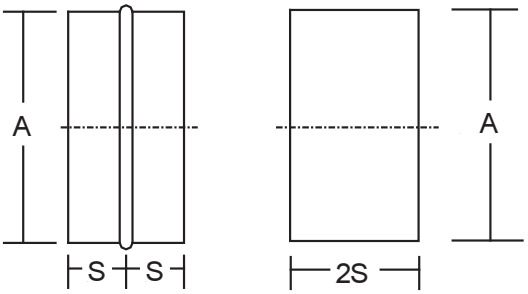

S = 2"

CONNECTIONS

There are a number of methods of connecting fittings and spiral ductwork together. These include but are not limited to the following:

1- Slip fit (as illustrated in this catalogue)
2- Angle rings (vanstone or welded)
3- Welding
4- Proprietary flanges and connectors (contact your manufacturer)

ROUND FITTINGS

B1
Mini Bellmouth

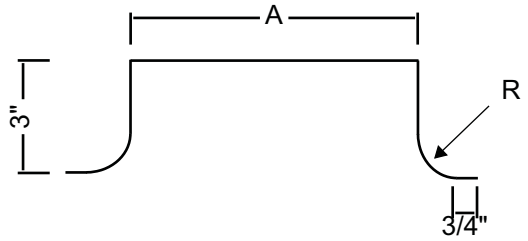

Available 4 to 24"
R = 3/4"

B2
Short Radius Bellmouth

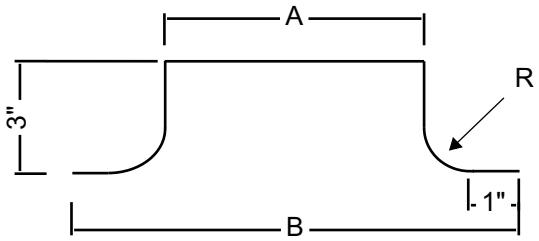

Available 6 to 120"
R = 1"
B = A + 4"

B3
Standard Radius Bellmouth

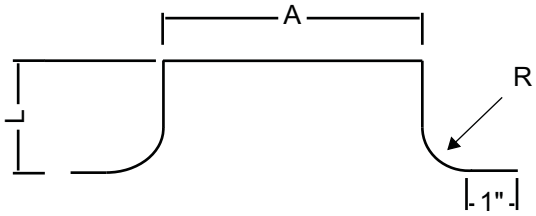

A	L	R
2-5"	2 1/2"	1 1/2"
6-10"	3"	2"
11-15"	4"	3"
16-21"	5"	4"
22-24"	6"	5"

A	L	R
26-30"	7"	6"
32-38"	8"	7"
40-48"	9"	8"

ROUND FITTINGS

BHT
BULL HEAD TEE

SPLITTER VANE
STD. OPT. TURNING VANES

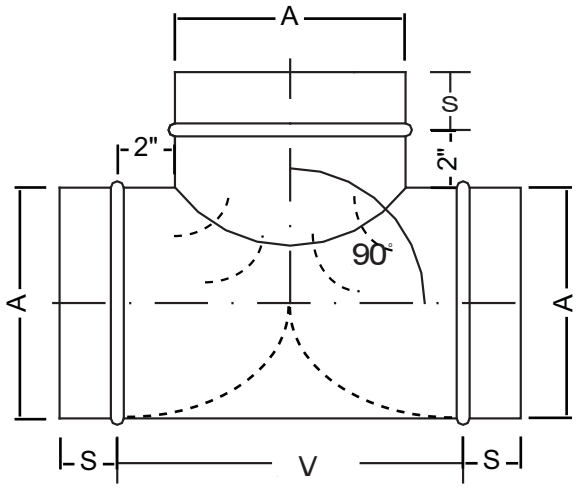

S = 2"
V = A + 4

BHTR
BULLHEAD TEE RED.

SPLITTER VANE
STD. OPT. TURNING VANES

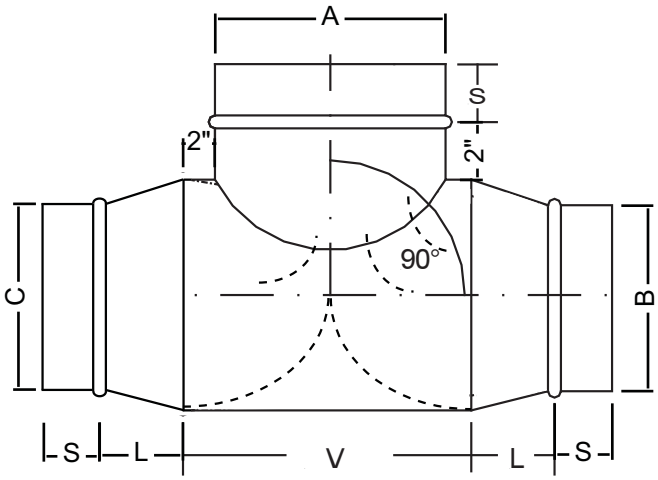

S = 2"
V = A + 4"
L = A-B (4" MIN, 12" MAX.)

CMBST
COMBINATION SADDLE TAP

A = 3 - 8	Y = 4"
A = 9 - 14	Y = 7"
A = 15 - 26	Y = 10"
A = 27 & up	Y = 13"

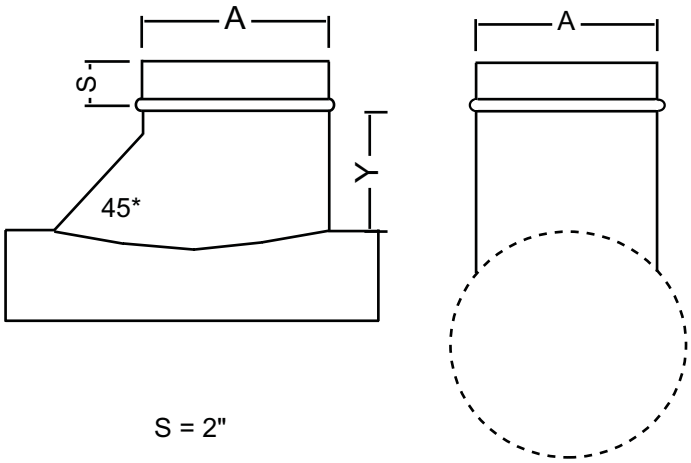

S = 2"

Spiral Seal

SUBMITTAL SHEET

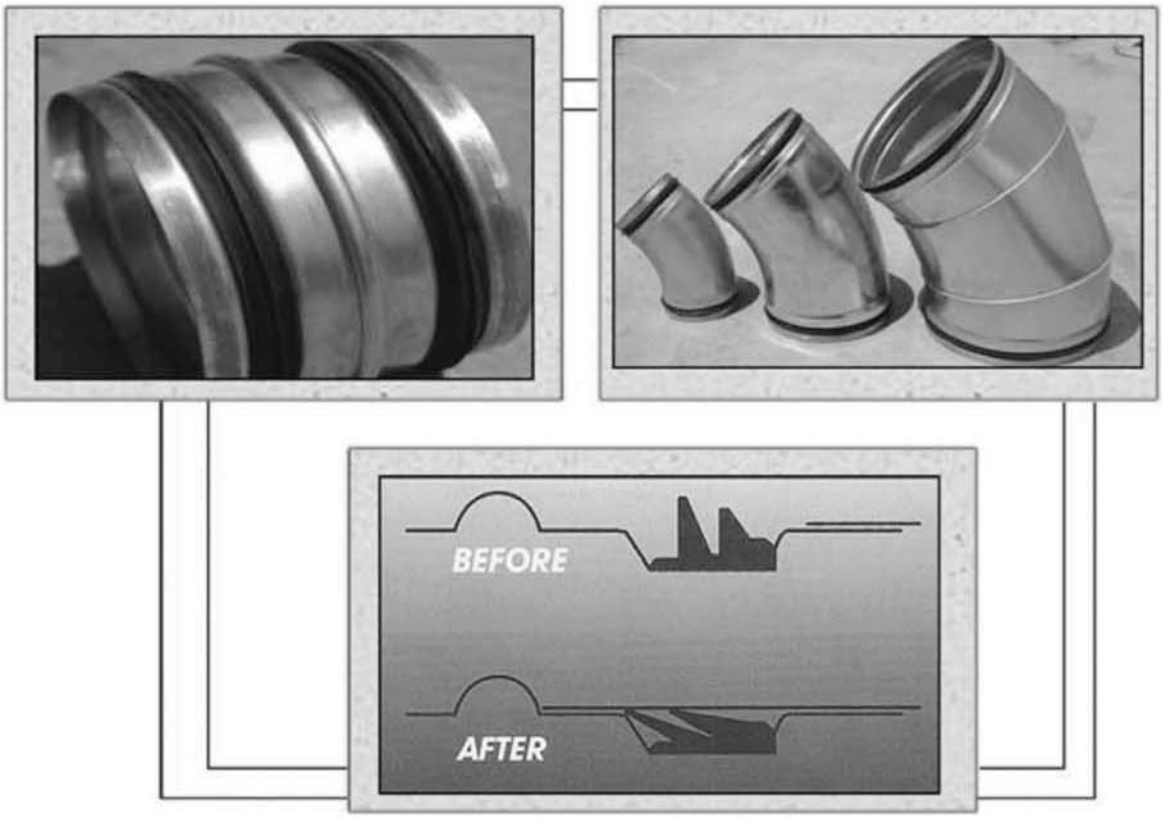

TurnKey
DUCT SYSTEMS

12450 Cleveland Road Suite 204
Garner, NC 27529
Phone: (919)662-9232 | Fax: (919)662-9234
www.turnkeyduct.com

TurnKey
DUCT SYSTEMS
12450 Cleveland Road Suite 204
Garner, NC 27529
Phone: (919)662-9232 | Fax: (919)662-9234
www.turnkeyduct.com

Product Information

SpiralSeal fittings will save you money and increase your profitability by reducing the installation time with eliminating the need of sealant or duct tape. **SpiralSeal** fittings use a soft EPDM rubber, double dipped gasket to ensure an airtight fit. They are suitable for continuous temperature exposure in the range of –10 to 200 degrees.

SpiralSeal is available for the following fittings: reducers, elbows, end caps, couplings, bellmouths, straight and conical take-offs, saddletaps, dampers and full bodied fittings. These fittings are available in even and odd sizes from 4" thru 10" and from 12" thru 36" in even sizes only. Available in single wall construction made from galvanized or galvanealed (paintgrip) material.

SpiralSeal fittings have been independently tested. Once you have connected the joint, the gasket provides an air-tight seal that meets SMACNA's Class 3 leakage requirements for –2" w.g. to +10" w.g. The smoke and flame spread is in accordance to ASTM E-84-05.

All duct and fittings are made per SMACNA's Duct Construction Standards (+10" W.G.) The following table shows diameter and gauges.

Diameter	3"-14"	16"-26"	28"-36"
Spiral Duct	26 ga	24 ga	22 ga
Fittings	24 ga	22 ga	20 ga

Spiral Seal fittings are manufactured by using the following methods:

- Solid Welded
- Stitch-Welded along the entire length of fitting
- Standing seam gore-locked

Installation

SpiralSeal fittings are undersized and are designed to slip into spiral pipe. These fittings can be used with nearly any spiral pipe manufacturer as long as their tolerances are closely met. Since a tight fit is necessary to make the proper seal, extra force may be needed to slip the fitting into the duct. To ensure that the gasket does not get damaged, be sure there are no dents or distortions at the edge of the duct.

Be sure the fitting is pushed all the way into the pipe and that the pipe is pushed up to the bead or the taper of the fitting. Secure the connection by using self-tapping sheet metal screws uniformly positioned around the circumference of the fitting in accordance with SMACNA Guidelines Insert the screws no more than 1/2" back from the edge of the pipe.

D U C T M A T E

ROUND CONNECTION SYSTEMS

ECONO*flange*™

Round Duct Connection System

Fast Screw Connection

- Simple installation process
- Can be installed on-site
- No special tools required
- Available in sizes 8" - 72" in standard 2" increments
- Available in specialty metals

DUCTMATE® Industries, Inc.

ECONO*flange*

Round Duct Connection System

DESCRIPTION

Round duct connection system

BASIC USE

The ECONO*flange* connection system was designed as an alternative round duct connection for applications in which appearance and performance are not paramount.

SPECIAL CHARACTERISTICS

Flange Construction:
Hot-dipped galvanized steel, cold-formed.

48" and under:
18 gauge steel

50" and up:
16 gauge steel

Gasket:
Ductmate Neoprene

ECONO*flange*
8" - 72"

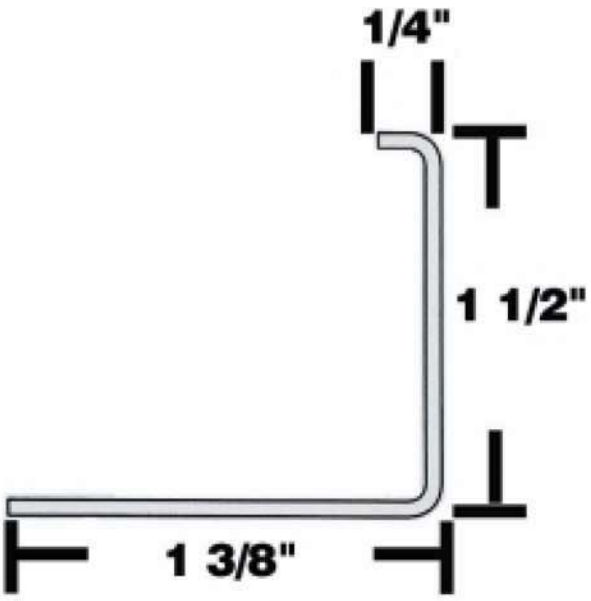

PRODUCT GUARANTEE

All component parts of ECONO*flange* system are guaranteed against defective material.

PACKAGING INFORMATION

The ECONO*flange* connection system is sold in single rings.

INSTALLATION INSTRUCTIONS

1. ECONO*flange* is manufactured with a split in the ring to allow for minor deviations in the diameter of the pipe.

2. Start the ring by inserting the 1 3/4" leg inside the duct.

3. Seat the ring flush with the end of the duct and clamp the ring into position.

4. Begin securing the leg of the ring to the duct section at the split. Hold the flange in position by placing vise grips a few inches from the break. Begin placing a self drilling screw, spot weld, or line rivet 1/2" from the break.

5. Continue in one direction attaching the flange to the duct 1" from the face of the flange, 10" on center around the circumference of the duct. Optional stitch welding around ECONO*flange* to duct 10" center. Assure stitch welds cover 50% onto duct and 50% onto flange for a strong weld.

6. Seal the joint internally with PROseal duct sealant. Brush the sealer into the joint achieving a 100% seal.

7. The break in the flange will allow a portion of the leading edge of the duct to be visible. For a better seal on medium to high pressure jobs (4" and higher) it is preferred that a short piece of Ductmate 440 gasket be applied to the face of the flange to cover the leading edge on both mating flanges. (On low pressure jobs the 440, applied to the split, can be replaced by Ductmate Neoprene gasket.

8. Apply Ductmate Neoprene gasket 5/16" by 3/4" wide to the face of one of the ECONO*flange* Rings. The Neoprene should be positioned parallel to the inside edge of the ECONO*flange*. The Neoprene gasket ends must be butted against each other.

9. Align mating frames by matching the ECONO*flange* ring evenly around the circumference.

10. Clamp the mating ECONO*flange* rings compressing the gasket until the mating rings touch.

11. Fasten self drilling screws 6" on center around the circumference of the flange face. In order to assure a proper closed joint, the rings should be clamped tightly together with the two faces touching each other prior to fastening the self drilling screw. Proper care should be taken in setting the clutch adjustment of your screw gun to assure your screws have 100% holding strength.

*** Econoflange can be installed on reducing fittings in the same manner as a small end collar. This eliminates the need for collars unlike other traditional flange connecting systems.*

DUCTMATE® Industries, Inc.

CHARLEROI, PA
210 Fifth Street
Charleroi, PA 15022
800-245-3188
724-258-0500
FAX: 724-258-5494

LODI, CA
810 S. Cluff Avenue
Lodi, CA 95240-3141
800-344-3270
209-333-4680
FAX: 209-333-4678

www.ductmate.com

Distributed By:

Ductmate is a proud member of the following organizations:

SMACNA

SPIDA
SPIRAL DUCT MANUFACTURERS ASSOCIATION

Take-Offs & End Caps

The take-offs are superior products that are available at a low cost. Each one is precision spun in one piece from galvanized or galvannealed steel. End caps are gore-locked and eliminate costly hand fit-up and welding.

Bellmouth Take-off

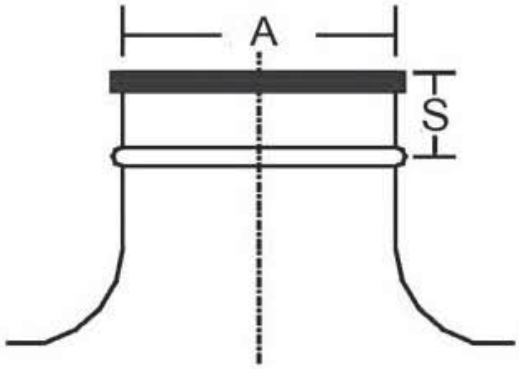

A (inch)	4	5	6	7	8	9	10	12	14	16	18	20	22	24
WT. (lbs)	1.3	1.5	1.7	1.9	2.0	2.2	2.4	3.8	4.4	6.5	7.1	7.3	9.7	10.4

Conical Take-off

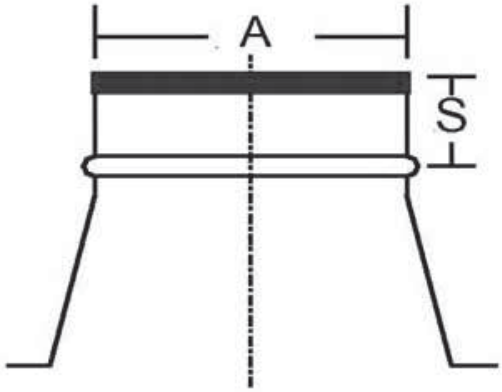

A (inch)	4	5	6	7	8	9	10	12	14	16	18	20	22	24
WT. (lbs)	1.0	1.2	1.2	1.5	1.7	1.9	2.1	2.5	2.9	3.4	3.8	4.2	4.7	5.1

Straight Take-Off

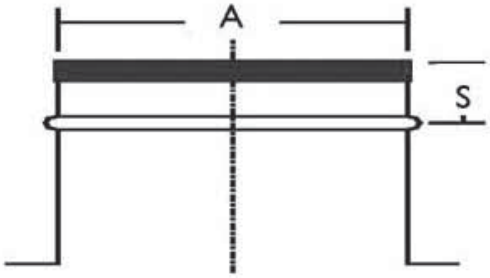

A (inch)	4	5	6	7	8	9	10	12	14	16	18	20	22	24
WT. (lbs)	0.3	0.4	0.5	0.6	0.8	0.9	1.0	1.2	1.3	1.5	1.6	2.0	2.2	2.4

End Cap

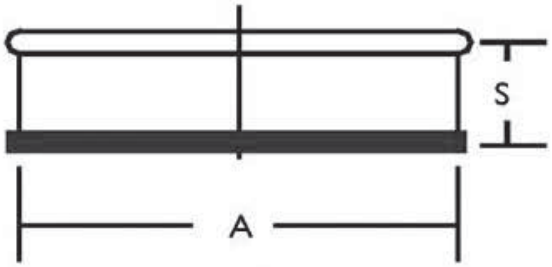

A (inch)	4	5	6	7	8	9	10	12	14	16	18	20	22	24
WT. (lbs)	0.3	0.5	0.7	0.9	1.0	1.3	1.5	2.0	2.6	3.2	4.3	5.2	6.1	7.1